Underbar Double Speed Rail

Stainless Steel Underbar Double Speed Rail

Use your smart phone to scan the above QR code to visit our website: www.bk-resources.com

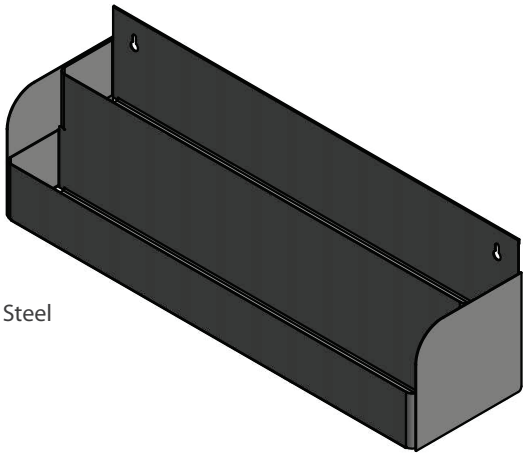

Features:
- Keyhole Mounting

Material:
- T-304 18 ga. Stainless Steel

Options:
- Single or Double

Part Number	Width A	Width B	Holes	Product Weight (lbs)
BKUBSR-2-24	24	21″	2	10.00
BKUBSR-2-30	30	27″	2	12.50
BKUBSR-2-36	36	16 1/2″	3	14.50
BKUBSR-2-48	48	22 1/2″	3	20.00

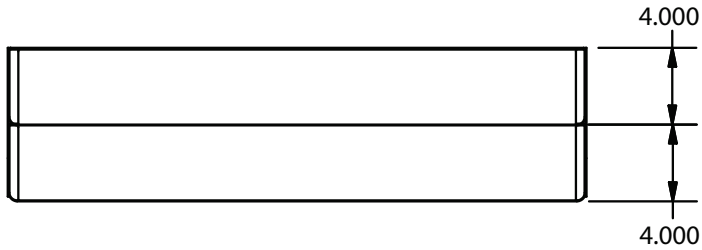

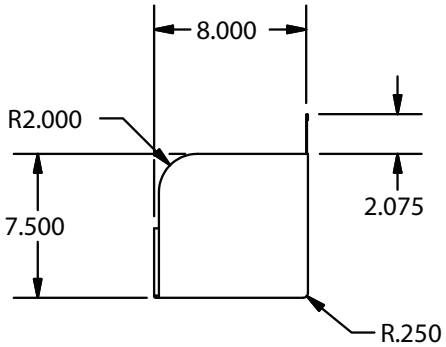

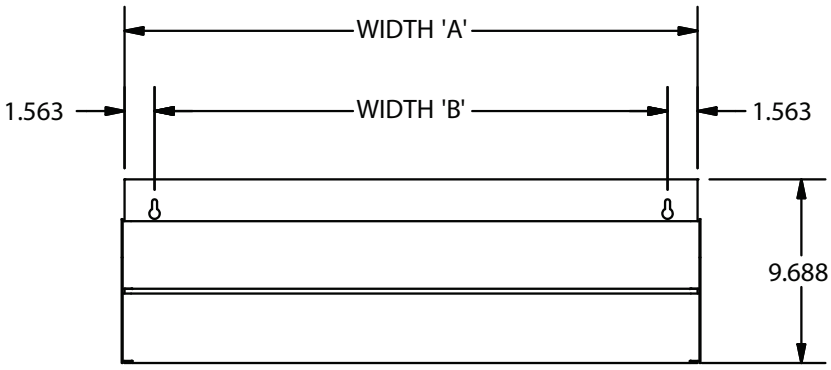

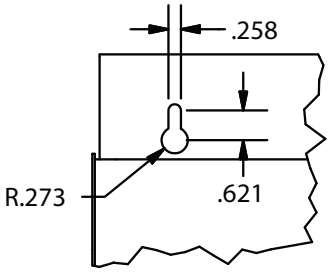

PRODUCT DATA SHEET

BK RESOURCES

Phone: 888-310-4393 | Fax: 888-310-4394 | Website: www.bk-resources.com | Email: sales@bk-resources.com